Case Study: Installing a Hotel Electric Car Charger

** Note: This case study is for illustration purposes only. Actual installations should use local codes and permit requirements, local building standards, and individual project goals to guide the installation.*

This case study describes an example installation of a single J1772 charger at a small hotel. In this example, the manager wanted to perform some of the work with his maintenance staff and an electrician in order to better manage the project and to save costs. The hotel has an asphalt parking lot with a concrete curb surrounding the perimeter as well as a concrete side-walk running around the parking lot adjacent to the hotel. Between the hotel exterior wall and the sidewalk is a 25-foot wide section of landscaped area. The charger is to be located about 30-feet from the exterior wall across the landscaped area, sidewalk, and curbing to the edge of the parking lot.

Stage 1: Specification

A specification document was drafted for all parties to understand the high level requirements. For example:

- A single ~7 KWatt / 240V / 40 Amp J1772 charger installed at the edge of the parking lot near the sidewalk, to one side of the chosen parking slot, and mounted on a post
- A remote switch at the reception desk with an indicator light to enable and disable the power to the charger
- A small timer panel near the remote switch to optionally provide power to the charger for a set amount of time
- An exterior green charger light to assist guests using the charger and to indicate the charger status
- An energy meter to measure the total amount of energy used by the charger
- Future scalability such that a second charger can be added as desired
- Conforming to both local and NEC Codes and regulations
- All local inspections and permits to be managed by the electrician
- Minimal disruption to existing guests and to the visual appeal of the hotel both during and after construction

Stage 2: Initial Plan

Power Panel

The existing hotel power panel was located inside the hotel machine room and had two available breaker slots free. These spare slots would be used to supply a new sub-panel mounted next to the existing main panel. This arrangement allowed for future expansion and flexibility while providing circuit protection.

Positioning the charger

The hotel manager decided to locate the new charger on a post next to the designated EV parking stall near the mechanical room. His choice in location was determined in part to minimize the distance from the electrical panel in the mechanical room to the new charger to minimize the length of the trench digging, conduit and wires to help minimize cost.

Electrician

Once the ideal location of the chargers had been located the manager called his electrician. The electrician was somewhat familiar with his hotel and knew that the panel could handle an extra 40-Amps during night time use and an extra 100-Amps in the future. The electrician was shown the proposed location of the intended charger and agreed that the location was a good choice.

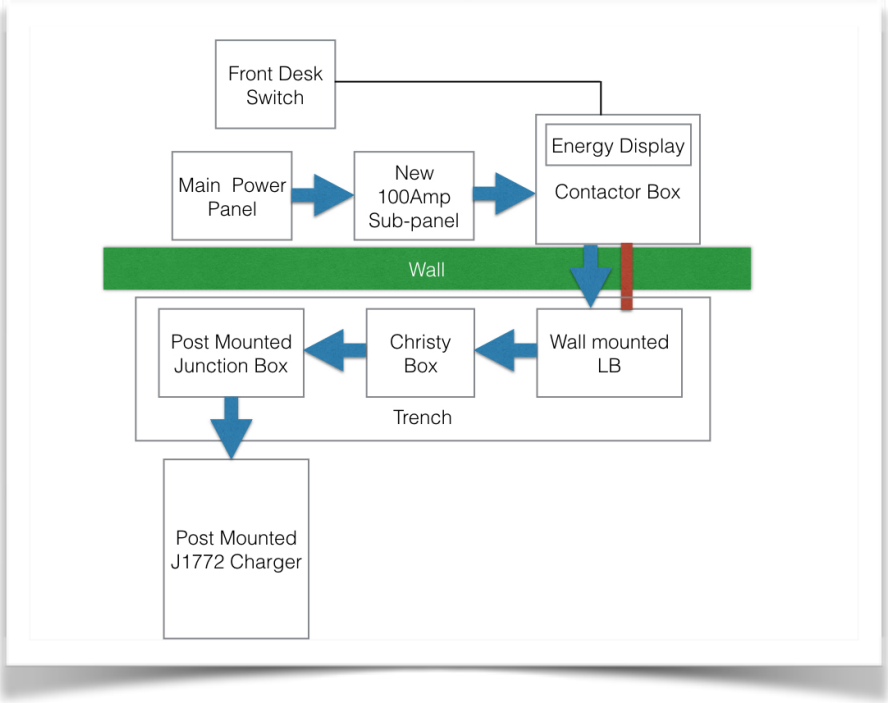

Stage 3: Permit, Detailed Plan & Inspection Schedule

The manager and the electrician together drew up and agreed upon the detailed construction plan including layout and schematics, deliverables, cost, schedule, ownership and warrantee for the basis of a work contract. The electrician then took the project details to the local building department to open up a building permit. He took note of the inspections required by the local city inspector and resolved any concerns from the building department before commencing work.

Stage 4: Implementation

Position the Conduit and Sub Panel

Planning the installation, the electrician located the approximate best spot to exit the power conduit from the machine room through the exterior wall of the hotel. He planned for the power wires to run inside the walls and then in conduit, along a planned trench outside. Next, he located the ideal spot for the exit hole in the wall. He found a spot in between two studs on the inside of the machine room, about 4ft along the wall from the main power panel.

He then located the studs in the wall with a stud finder and approximately positioned two new electrical boxes; 1) the new sub-panel and 2) the new contactor box located to cover the position of the intended exit hole. Before attaching the new boxes to the wall, the electrician marked the exit hole spot on the interior wall, ~4ft above the ground, where the power will exit the wall. A small locating pilot hole was drilled with an 8" long, thin masonry bit, through the inside sheet rock through the stucco wall outside. This would be the location of the contactor box and was then clear, looking from the outside, exactly where the trench needed to be dug.

Install the new 100-Amp Sub-Panel

The first installed box was a 100-Amp rated, interior, flush mounted, sub-panel and was fed from the adjacent main power panel. The new sub-panel was positioned in between two studs, recessed in the wall. The electrician marked and cut a rectangular hole in the sheet rock so that the sub-panel's body

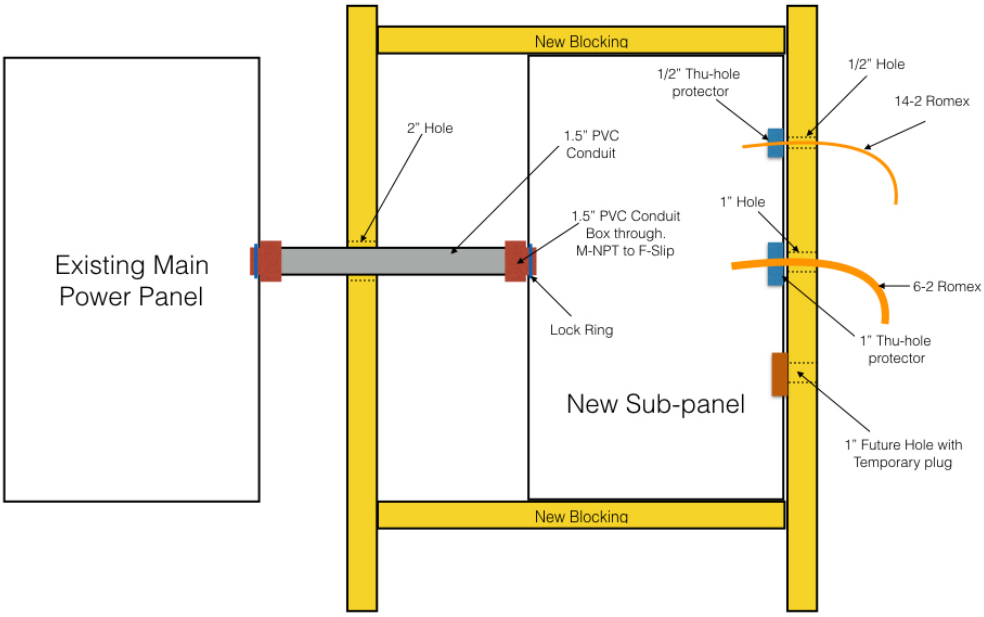

could fit inside the wall. A 2″ hole was drilled in the stud between the existing and the new panel, centrally exposing the side of the power panel to run conduit linking the two panels. On the other side of the new sub-panel, three more holes were drilled. Two, 1″ holes to the contactor box, along with a 1/2″ hole. Lateral blocking was measured and added to the top and bottom of the new sub-panel and lay horizontally to provide a basis for securing the new sub-panel, once wired up. In the sub-panel body, holes were made into it's sides using a metal hole saw to match the holes drilled into the lateral studs. A ~2″ hole on the left side and on the right side, 1″, 1″, 1/2″ holes, exactly aligned to the respective holes in the studs. After the main power panel was switched OFF, a ~2″ hole was drilled into the exposed side of the main panel. A short piece of 1.5″ conduit was sized, with neat PVC Slip-to MNPT box connectors, glued onto each end so that lock rings could be used to tightly couple the conduit tube to the 2 resultant power panels. This conduit would provide a tight 1.5″ conduit connection between the power panel and the new sub-panel, large enough to feed the 100-Amp supply with it's 4 required 3/0 conductors. The conduit stub was installed and secured to the main panel's hole.

Connect 100-A Sub-Panel to Contactor Box

An additional pair of 1″ holes was made in the sheet rock, 2″ from the main exit 'pilot' hole position, allowing conductors to feed from the sub-panel into the back of the Contactor box. Similarly, a 1/2″ hole was also made. The first 1″ hole was fed with a length of 6/2 Romex (2 conductor + ground). A pair of fishing wires were used to work the blind holes. The Romex was then fed into the uninstalled sub-panel and protected with a 1″ plastic box through. A piece of strong string was also fed from the contactors hole to the second 1″ hole in the sub-panel' and secured as an 'expansion' option for future wire pulling. The 1/2″ hole through the stud and sub-panel was also fed with conductor in the same manner, in this case a 15-Amp, 14/2 Romex cable from the sub-panel to the contactor was installed, to be used to control a contactor from the front desk. With these 2x Romex's in place, in the sub-panel side hole, the sub-panel body was secured into its rectangular hole in the wall. The 1.5″ conduit stub to the main panel was aligned into it's hole and a lock ring attached. The sub-panel was then squared up and screwed to the wall using the newly installed 2×4″ blocks.

125’ 6/2 W/G NMB Cable
SouthWire 28827421 14/2WG NMB Wire 25-Foot

Install Sub-Panel Supply Wiring

With the main power panel switched OFF, three new 3/0 conductors wires were fed through the short 1.5” conduit stub connecting the main panel to the sub-panel. A 100-Amp 240V breaker was installed into the main panel. The 3/0 conductors were connected to the +110V/-110V and neutral in the main power panel. A 4th #6 ground wire was also connected. The new sub-panel’s bonding screw was removed so that the neutral and ground was NOT connected inside the sub-panel.

A 50-Amp / 240V Square-D, Homeline, breaker was then installed into the sub-panel. In the future, a second 50-Amp breaker can be installed into the sub-panel to protect a second charger circuit.

- New: 100-Amp – 240V breaker – in the main panel feeding the 100-Amp sub-panel
- New: 50-Amp – 240V breaker – in the new sub-panel feeding the individual charger
- New: 15-Amp – 110 breaker – in the new sub-panels – feeding the contactor and front desk switch.

100-Amp sub-panel
Square D by Schneider Electric HOM1224M100PC Homeline 100 Amp 12-Space 24-Circuit Indoor Main Breaker Load Center with Cover (Plug-on Neutral Ready), ,

Position the Contactor Box

Following from this sub-panel, 24” to the right of the sub-panel, the electrician planned to place a clean, 15” x 18”x 4” grey metal ‘contactor’ box, this time on the surface of the wall. The contactor box would serve several purposes:

- Cover up the exit hole to the exterior providing a neat wall power exit point
- Cover up the 6-3 Romex's wall hole, so as to hide it
- House one (with possibility to expand to two) 50-Amp contactors
- House a pair of energy meters/display pads

Safety Technology STI-EM151804 Beige Box 15X18X04
AC Contactor 120V Coil 40A DIN Rail 3P Three Pole 1NO 1NC IEC AC3 32A, AC1 50A

So what is a contactor? A contactor is just an electrical power switch. It allows a small, inexpensive, 14/2 110V Romex wire to be run from the front desk to control the relatively large amount of 240V power flowing from the power panel to the charger eliminating the need for heavy power wires to be run back to the reception desk. It's a remote control power switch for the front desk. It's in a small 3″ box made of heavy magnetic materials and steel that is bolted to the back of the contactor box. (Positioned so that it will not crunch into the energy meter box, when the lid is closed.) A 50-Amp, 240V contactor was used that was controlled by a low cost 110V Romex and light circuit. A 3-phase model will be less expensive than a single phase 50-Amp contactor and can be connected using only two of the three available power contacts to connect up the #6 conductors. The #6 Romex goes in one side and the #6 THWN conductors run out the other side. A thin, 14-2 Romex is also connected to perform the switching.

Charger Meter, Remote Switches, Charger Lights

As an additional option beyond the standard functionality of the charger, the manager wanted to install an energy meter in the machine room, so that the energy used by the chargers could be noted with some frequency. He also wanted to be able to switch the charger power on and off from the reception desk with a small control switch located by the front desk with an indicator light to show when it was on. He also wanted a simple light outside on the charger post to indicate there as well when the charger power was switched on. This would assist both the management and the EV Driver guest using the charger as it would indicate when it was ready to use and that it was working correctly.

Install the Energy Monitor

The energy delivered to each charger conductor may be monitored and logged with a current transformer, and it's associated electronics. A rectangular hole 45mm x 85mm was cut into the front of the contact box (remembering to leave enough space for a potential additional one in the future) with an

appropriate metal saw. The hole was carefully filed to the size of the energy meter. Below is a low cost meter that monitors the charger power and energy used.

bayite AC 80-260V 100A BYT-VAEM-034 Digital Current Voltage Power Energy Meter Ammeter Voltmeter with Open-close Current Transformer

Next, a pair of hole saws (2″ bit and a 2.5″ masonry hole saw, SDS bit along with a long 12″ masonry pilot hole bit) was used to cut a hole out of the wall to install a conduit schedule-80 plastic nipple to route the primary power wires for the charger. The nipple will fit snuggly into the inside sheet rock and very loosely in the outer stucco side of the wall. Before insertion, the nipple is screwed into a 2″ threaded metal LB box located on the outside of the wall. Importantly, the 2″ LB's female flange is wider than the 2″ PVC nipple, so the hole saw for the outside wall hole needs to be approximately 1/2″ wider diameter than the hole saw bit used for the inside sheet-rock. When inserted, the LB flange tucked into the wider outside stucco hole and was bedded with a goodly amount of silicon caulk. From the LB, the approximately 6″ (depending upon how thick the wall is) nipple extends only 1/2″ beyond the inside of the sheet wall, sticking out into the room by 1/2″. This is an important value to get right or the contactor box lock ring can not be tightened. Hunt for an appropriately sized nipple that will fit the wall in question after the hole has been drilled and the depth measured. By using an initial pilot hole, the two holes should align on either side of the cavity wall.

MAGBIT 625.4016 MAG625 2-1/2-Inch Carbide Tipped Holesaw with 1-9/16-Inch Depth

Hubbell-Raco EALB-6CG-1 Rigid Conduit Body Type LB, 2-Inch
2″ Aluminum, solid LB Box with threaded female ends.

Install the Contactor Box

Next a 2″ hole was drilled in the back of the contactor box, leaving plenty of space for attaching (up to two) 50-Amp contactors onto the back of the box. The contactor (50-Amp/240V with 110V coil voltage) was installed securely with small nuts and bolts inside the contactor box. The contractor box was then slipped snuggly over the protruding 2″ diameter nipple and secured with a pipe lock ring. As the lock ring was tightened, the LB box and the contactor box were both pulled against the wall securely. Once the contactor box was leveled, 3 screws were used to attach to the wall and prevent rotating or slipping.

Finally, exterior, high-quality, clear silicone caulk was used to ensure the LB penetration was sealed into the stucco hole and water tight. At this stage, the LB, the nipple and the contactor boxes was secure and waterproof.

GE Silicone II Clear Caulk, 10.1-Ounce Cartridge GE5000
Newborn 930-GTD Drip-Free Smooth Hex Rod Cradle Caulking Gun with Gator Trigger Comfort Grip, 1/10 Gallon Cartridge, 10:1 Thrust Ratio

Install the Trench

The hotel manager hired some local help to dig the trench outside the hotel from the location directly below the newly installed LB Box to where the charger post was to be installed. The slot to be cut across the sidewalk was drawn to be 8″ wide train-tracks, with a straight edge and a marker pen. For the trench they first required the use of a 7 1/4″ concrete saw blade, installed into a low cost circular saw, to cut two clean slots though the side walk. Once cleanly cut to a 2.5″ depth, the resultant central section of concrete along with the remaining thin layer, below the surface was removed with a small rotary impact SDS drill and the rubble cleaned away exposing the soil below.

Bosch CS10 7-1/4-Inch 15 Amp Circular Saw

Bosch DB741C 7-Inch Premium Segmented Diamond Blade

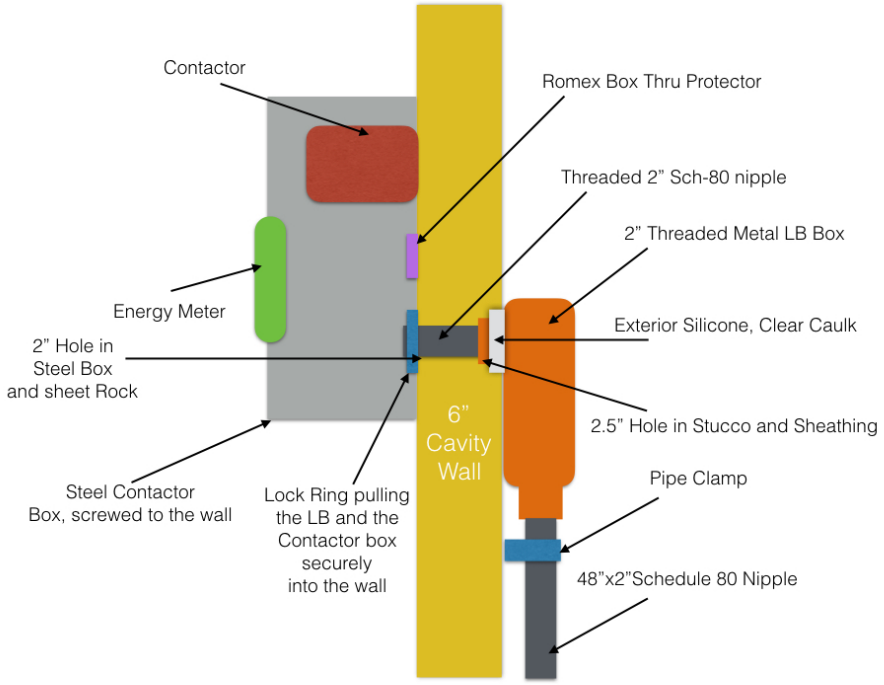

This rotary hammer was invaluable to dig through the remaining concrete. It was also used to drill the pilot hole through the stucco siding, when installing the LB.

Bosch 11255VSR BULLDOG Xtreme 1-Inch SDS-plus D-Handle Rotary Hammer
Bosch HS1427 SDS-Plus Hammer Shank 2-1/2-Inch by 10-Inch Wide Steel Self-Sharpening Chisel

Some tricky bits of rebar was also discovered while digging through the concrete. An angle grinder with a metal blade made short work of them. Through the new clean slot in the sidewalk, a shallow 8″ wide trench was dug by hand. The spade bit on the SDS hammer drill was handy to dig through some of the tougher bits of the remaining dirt. During the digging process, great care was taken to go slow and inspect for any unforeseen buried pipes or services. The trench was made to be 2-ft deep along it's length rising to 12″ deep at the ends where the conduits enter the ground to a Christy box which was used to simplify future expansion.

DEWALT DWE402 4-1/2-Inch 11-Amp Paddle Switch Angle Grinder
DEWALT DW8061B5 4-Inch by 0.045-Inch Metal and Stainless Cutting Wheel, 5/8-Inch Arbor, 5-Pack

Install the Christy Box

A small concrete 12″ deep Christy box with a concrete lid marked "*Electrical*", was installed 2″ above the ground level within the planter bed, 3-ft from the concrete side-walk. This would allow for wire pulling and future expansion if desired. The position of the Christy box was chosen such that, should another charger be installed in the future, only a short trench would be needed to make the hop over to the second charger from the Christy box. Christy boxes are under-ground junction boxes that make

Cantex Industries 5233768U 2″ Sch40 45DEG Elbow
LAMSON 1″ Non Metallic 45 Elbow Schedule 40
Bell End for conduit

branching a circuit, and pulling new wire sets simple. They can be found in any good building supply store or an irrigation supplier and they are heavy. The dirt was compacted for the Christy box and then it was placed into the trench, nicely squared up with the sidewalk. A concrete-fiber lid marked "Electrical" was purchased to place on top of the box to indicate its contents. A semicircle hole was cut out at the bottom of the Christy box with a hammer to make the conduit simpler to feed into the box and sit securely in the 'slot'. The top was checked for level and set about 2″ above the ground so that landscaping paper and mulch could be brought up to the edge neatly and also so that it would not act

as a sink hole for rain water. The conduits, laying in the 2-ft deep trench at either end of the new Christy box were sweep up gently into the box from below and were terminated with a PVC Bell End. The bell ends were set so that they ended up about 6″ below the Christy box lid lower surface. The conduit ends were terminated with a 45-degree conduit and an extra fluted end cap to prevent chafe.

Install the Exterior Conduit

Back at the outside wall, a vertical threaded steel 2″ conduit was screwed into the LB on the wall, running down the wall and into the trench. It was secured to the wall with two galvanized steel pipe clamps so that the conduit and the LB was now solid and running parallel to the wall, down into the trench. The steel conduit was transitioned to a PVC sweep below the surface, with a 2″ PVC conduit female-female threaded to slip coupler. Followed by a 2″ 90 degrees PVC Sch-40 sweep. The conduit

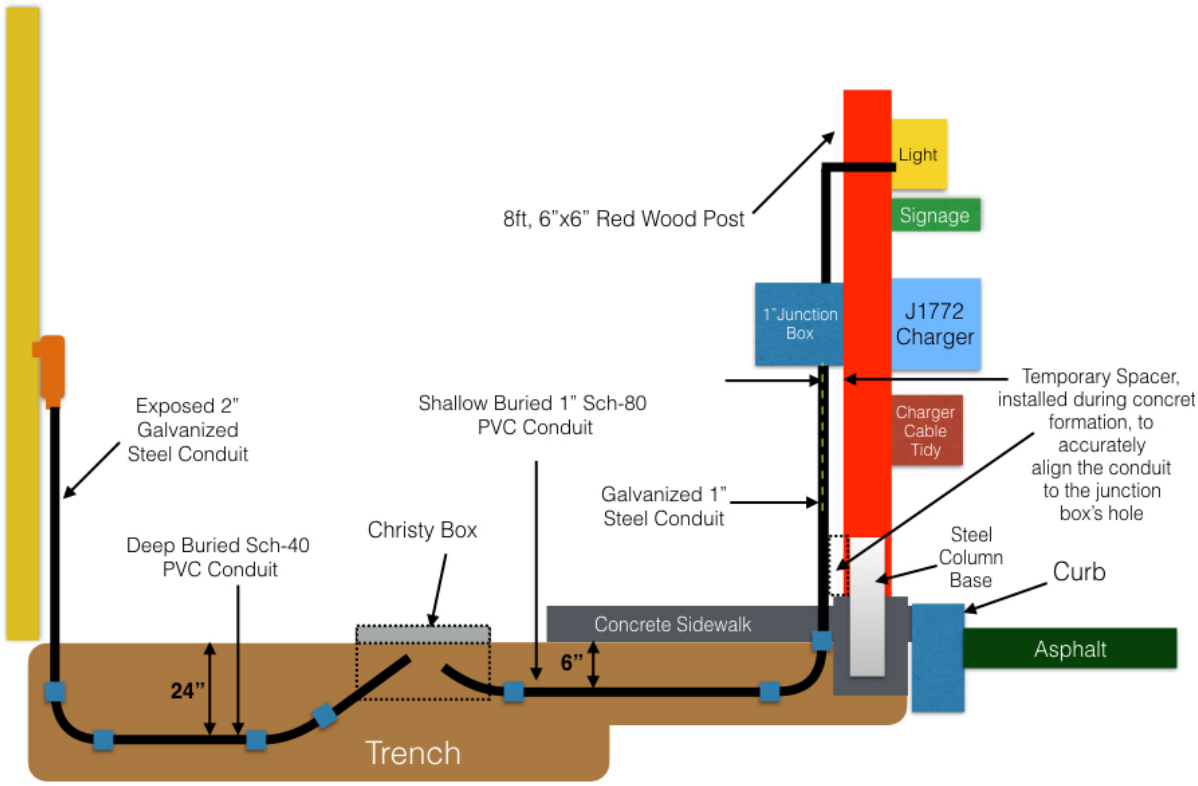

was then continued 2-ft below ground level, along the trench for approximately 20-ft to be swept up at 45-degrees into the Christy box. The conduit was dry fitted until the entire length was in place and verified to be the correct length. Only then was it pulled apart and glued up. The conduit was glued with PVC cement and cut appropriately with a reciprocating saw using a metal blade. From the Christy box, 1″ schedule 80 conduit was again swept down at 45 degrees and continued to run to the charger location. Schedule 80 was used for extra strength such that the conduit may be buried shallow before arriving at the sidewalk, positioned a few inches below the intended new concrete patch. The trench was transitioned to a 6~12″ deep trench running under the concrete sidewalk and finally to a 12″ deep hole at the location of the new charger post. The 12″ hole would provide for a solid concrete base in which to mount the charger post. Beyond the Christy box, the main line of 1″ conduit in schedule 40 was

transitioned down to 24″ deep below the surface grade that was not intended to be covered in concrete. This continued for around 20 feet before arriving at the side walk. A tight (12″) radius, 1″

DEWALT DCS387P1 20-volt MAX Lithium Ion Compact Reciprocating Saw Kit
DEWALT DW4813-2 6-Inch 24 TPI Straight Back Bi-Metal Reciprocating Saw Blade (2-Pack)
Weld-On 10121 Pint 711 Heavy Duty PVC Cement, Gray, 1-Pack

schedule 80 plastic sweep was installed from the trench to the charger post location, making sure the ends were below the level of the concrete before running vertically. It was transitioned with a PVC 1″ Slip to FNPT coupling, to a 48″ x 1″ galvanized steel conduit where it then stood vertically, positioned 1/2″ from the intended face of the post. This distance would allow for perfect alignment to run the conduit straight into the post mounted junction box. This 8-foot length would provide the versatility to install multiple components: the charger, the junction box, the cable tidy, the sign and a light.

Mount the Post Base

To mount the post, a steel CB66 6″x 6″ Strong tie was positioned to be embedded into the concrete post base, located 8″ back from the curb edge. It was cleaned and then sprayed with two coats of black enamel paint before installing. A piece of plywood was used as a spacer along with tape to hold the vertical steel conduit to the rear of the CBC30 post base. The idea was to position the final post 1/2″ away from the conduit, but rising with it in parallel. Care was taken to align the post base and the position of the rising conduit and to verify the final post position before pouring the concrete. Finally, a 1″ metal exterior junction box was installed on the post to allow the final connection to the charger to occur in a waterproof box. The box, screwed onto the 1″ conduit was positioned to exactly rest against the final, vertical face of the wooden post after installed into the Strong tie. Holes in the box were blocked with the supplied plugs and 5 wraps of PTFE tape to ensure rain would not get in during the rest of the installation.

Simpson Strong Tie CB66HDG 6-Inch by 6-Inch Post Column Base Hot Dipped Galvanized

Hubbell-Bell DB5100S 4-1/2-Inch X 4-1/2-Inch Gang 2-Inch Deep Weatherproof Box, 1-Inch Outlets, Gray

With all the conduit and boxes installed, the city inspector was called to inspect the 'rough' electrical: conduit installation, box installation, gauge and depth. This was done before any wiring, backfilling the trench and pouring any concrete. It would be easy at this point to make any modifications requested by the inspector.

After the inspector had signed off on the 'rough' electrical, a wood concrete former, 12″ square of 2″x4″ wood was positioned and secured level with wooden stakes and screws around the intended column base position such that that surface of the concrete based would end up 3.5″ above the original concrete sidewalk. The vertical 1″ conduit riser was firmly positioned so that it would not move during the concrete pour and a spacer used to ***exactly*** space the column base edge from the 1″ conduit riser. The space was calculated to ensure the conduit would run into the post mounted junction box hole above while running exactly parallel to the final wooden post as mounted exactly in between the column base Simpson plates. Additionally, 2 pieces of #3 rebar were bent into 8″ squares at the local hardware store to strengthen the concrete and would be pushed into the concrete, hooped over the column base, at two depths, during the pour. Four bags of ready-mix concrete was mixed and used to fill the hole in and under the former around the steel column base. The steel column base and 1″ conduit would both be embedded in the concrete and rise up in the center of the new concrete square. A good amount of attention was placed into getting the 12″ former correctly positioned and well secured with stakes, so as not to move during the concrete work. During the concrete pour, the 12″ wood former was tapped hard with a hammer to settle the wet concrete. The concrete was then troweled on top to finish it and leave it smooth. The post and 1″ conduit was checked for level and slightly adjusted when required as the concrete began to set up. The post and conduit was wiped clean with a damp rag as the concrete was setting, for a tidy finish. Once the concrete was just set, the forming square was removed and the 3.5″ tall sides of the new 12″ wide concrete post base was troweled smooth and tidy. The concrete was then left for 5 hours. The painted column base was wiped clean and after 2 hours, a bucket of cold water was poured over it to prevent cracking.

Mount The Post

A smooth finished 6″x 6″, 6-ft redwood post was stained with two coats of UV resistant redwood stain. It was chosen to fit in the Simpson column base plates exactly. The post was positioned, 1/4″ above the bottom of the plate and two holes marked on both sides, checked for level, and drilled with a spade bit. The two holes were drilled half way into the post from each side. The post was positioned into the embedded column base and two hex bolts were used to mount the post loosely. The two 1/2″ Hex bolts were spray painted to match the column base. The bolts were tightened partially and the post checked for level. It rested up against the Junction box exactly. A marker pen was then used to draw a 1″ circle using the rear hole in the junction box as a guide. The post was then removed again from the base and a 1.25″ hole was drilled through the post in the newly marked junction box area. The post was replaced, again checked for level and the new post hole verified to line up with the junction box rear hole. Once aligned, a 1″x 6″ galvanized steel nipple was screwed through the 1/25″ hole and into the rear of the junction box. This nipple fed through the wood post and popped out the front side by 1/2″. A female 1″ box through cable clamp was screwed on to the end of the nipple. This arrangement would allow for

a secure way to support the charger supply cable. A 1″ stainless steel cable clamp was clamped to the conduit riser to secure it to the post. The post was again checked for level and the painted hex bolts were fully tightened with a 1/2″ impact driver. Back in the trench, the Christy box was rechecked for level and rags were stuffed into the 2″ and 1″ conduits that swept into the box and trench was then backfilled. The dirt was compacted at every 6″ of backfill. The area was tidied up and leveled with a rake and the mulch and landscape paper were replaced.

DEWALT DCF899B 20V MAX XR Brushless High Torque 1/2″ Impact Wrench with Detent Anvil

Pull the Conductors

Once the conduits we installed, glued and the trench backfilled and made tidy again, the 4 wire conductors were pulled though. The wiring digram below shows the gauges and conductor types used for the project. #6 wire connections made in the Junction box were not made using wire nuts. Instead, a heavy duty connection block was used due to the higher currents involved and due to the fact that light gauge #14 wire does not connect easily to #6 wire using simple wire nuts. The 4 wires pulled from the contactor box through the Christy box, to the post were THHN, THWN rated and sized as :

- 2x #6 wires for the 240V charger power
- 1x #10 Green Wire for Grounding
- 1x #14 Blue Neutral, for the light

Before beginning to pull wire bundles, the best conduit end to feed and pull from for each stage of the routing was chosen. The Christy box is often the best place to pull the longest wire bundle due to the 45-degree angle from the ground level to gain leverage and pull the wire with few obstructions. It is also a great place to feed wires into if more appropriate for the specific situation. Further, for long wire pulls, it is useful to embed the final 45-degree conduit legs into a bag of concrete. This provides extra strength to the conduit during a pull and can prevent the conduit from becoming unseated from it's ideal position. For this short run job however, the conduit was seated in compacted dirt with the rim of the Christy box sitting on top of it, providing plenty of strength. With enough lubrication, the conductors were not difficult to pull. The reason for the 2″ conduit was also apparent. Not only will it provide for enough capacity for a second set of wires, later on; but it also made the wire pulling very simple.

Barrier Terminal Block – SODIAL(R) 2 Pcs 45A Plastic Housing 6 Position Wire Connector Barrier Terminal Blocks

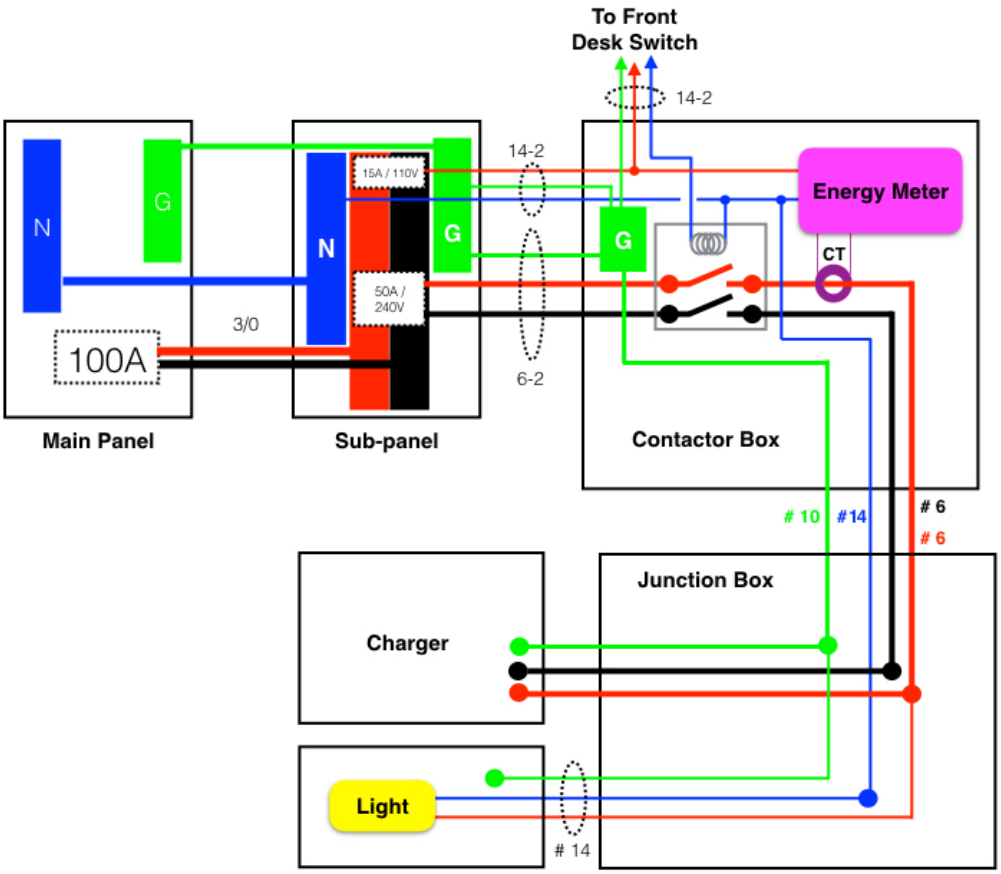

In this case it was decided to feed the conductors into the contactor box, and pull from the 2″ conduit in the Christy box, then to pull from the junction box and feed into the 1″ conduit in the Christy box. Care was taken to clean any dirt off of the conductors at this intermediate stage, so as to not feed dirty wires into the 1″ conduit. This means the conductors were being pulled in **one** direction. This in turn means that a pull rope could be used both for pulling conductors and to also measure the required amount of conductor exactly. This technique will always save cost. A strong 1/4″ polyester rope would be used to pull the conduits and measure the distance, but how to route the rope through the conduit? First one end of a thin line (#18 builders string) was tied to a small, lightweight, plastic super market shopping bag. The bag should be small enough to fit in the smallest conduit in the chain and can be cut to make it small enough. The LB face plate was opened with a Phillips screw-driver and the piece of bag on the string was then fed into the exposed vertical 2″ conduit below the LB. At the Christy box end of the 2″ conduit a 5-hp shop vac hose was placed onto the end of the conduit with a piece of duct tape to make a good air tight seal. The bag was then sucked though the line with the shop vac while being fed string from the LB end. If the bag didn't get sucked at first, it was resized until it slipped though the 2″ conduit. When the bag piece was sized correctly, this technique will suck through a string very rapidly. Once the bag and string had been sucked into the shop vac, the bag was then downsized a little and fed into the

CORDAGE SOURCE 91 No.18 Twisted Nylon Twine, 500-Feet, White
Vacmaster 12 Gallon, 5 Peak HP, Wet/Dry Vacuum with Detachable Blower, VBV1210
Black Dacron Polyester Rope 1/4″ X 100 Ft (8)

1″ conduit, exposed inside the Christy box. The shop vac was then moved to the junction box and an air seal made again with duct tape. Again the bag was sucked though. At this stage the nylon string was running from the LB to the junction box on the post. The 1/4″ polyester rope was then tied to the string at the junction box end and the string then pulled back to the LB, pulling the new rope through. Polyester/Dacron was used for the 1/4″ rope as it will not stretch as much as nylon to result in more accurate measurements. The rope was measured through the conduit, and then 24″ was added for looping inside the Christy box and 16″ on top of that for the contactor box connections. A shorter length of #10 gauge ground wire was selected to protect the 40-Amp feed circuit. The 2x 240V conductors were chosen to be #6 wire, and the neutral conductors were chosen to be #14 only for the light and was cut 36″ longer to get to the light fixture. The electrician bought long 500-ft spools of the required conductors so he didn't need to cut the wires before pulling and just pulled the conductors from the spools during the pull after rigging a simple spindle. The bundle of #6, #6, #14, #10 wires were taped together 6″ from the end and again 24″ down the wire to make a simple, manageable bundle. The rope was then connected to the 4 conductors. A loop was tied in the rope and the ends of the conductors split and bent over for 4″ over the loop of rope. With the rope loop firmly hooked over the wires, electrical tape was used to wrap the knot and to make a smooth bullet shape for feeding into the 2″ conduit. Water-based pulling lubricant was applied liberally into the top of the 2″ vertical conduit to assist the pull. Periodically adding the lubricant, the wires were then pulled though the conduit by pulling the rope through each of the two stages in turn to the junction box.

Klein Tools 51010 1-Quart Squeeze Bottle Premium Synthetic Wax Wire and Cable Pulling Lubricant

Klein Tools 56001 Depth Finder with High Strength 1/8-Inch Wide Steel Fish Tape, 50-Foot Length

Install the Light

An exterior-rated, green, LED light was chosen for the indicator light above the charger to be mounted on the post. When the reception switches the charger power ON, the green LED would light up showing the way to the charger and indicate that it is operational. Being LED, it would require only a small amount of energy to operate while the charger was switched on.

Sunlite 80146 Green LED A19 3 Watt Medium Base 120 Volt UL Listed LED Light Bulb, last 25,000 Hours
6797300 One-Light Outdoor Wall Fixture, Polished Graphite Finish on Steel Cylinder

The light was installed onto a mounting board, which was in turn fixed to the post with the use of a small 6″ x 6″ mounting plate fashioned from a piece of hardwood, painted and sized to fit on the back of the light fixture. The down light provided enough working light and at the same time was bright enough to show the guests where to park, without blinding people driving by.

Install the J1772 Charger

At 4-ft above the ground, the J1772 charger box was installed with it's own bracket. After double checking the position, the feed cable was cut and fed into the underside of the junction box using a cable box clamp. The underside was a measure to prevent rain water from getting into the junction box over the years to come. Connections to the 2x #6 conductors we made using a heavy terminal block. The cable tidy bracket was installed at a suitable position by bolting it to the post at a height of 3-ft.

JuiceBox 40A EV Charger / Home Level 2 Electric Vehicle Charging Station with 24′ Cord

This 40-Amp charger unit will deliver 4KWatts of power during an 8 hour sleep, or 32KWatt-hrs. With this charge, the car will obtain about 120 miles of range, and it will cost the hotel about 32 x 0.8 cents or $2.50 as the hotel manager had arranged the best EV rate with the local power company.

Install the Reception Desk Switch and Timer

The Electrician ran a new pair of #14 Romex cables (one for the future) from the contactor box to the reception desk area. A lower power 110V switch was installed at the reception desk area so that the receptionist could switch their chargers on remotely. The manager also wanted to install a timer capability at the reception desk so that he could limit the amount of charging time per guests to 2, 4, 8 or 12 hours.

Intermatic EI230W 2/4/8/12 Hour SPST 1800-Watt Electronic In-Wall Countdown Timer, White

Install the EV Charger sign.

A sign was posted to indicated which parking slot was dedicated for the EV Driver to use the charger. A blue sign was chosen to match the general theme of the hotel.

ComplianceSigns Aluminum Fuel sign, Reflective 12 x 12 in. with Alternative Fuel info in English, Blue

Complete Final Inspection

The city inspector was called in to complete his final inspection and all the work was considered good and matched the plan on file. Afterward, the 100-Amp breaker feeding the sub-panel was switched on, the reception switch was switched ON, and the LED light lit up and the charger was powered up and ready to go.

Add Hotel Charger Details to EVHotel App

We hope upon enjoyed this case Study and will decide to follow along soon. Good luck and from us, and a genuine *Thank You* for making your hotel EV Driver friendly.

- **Add your charger details to the EVHotel app - www.evhotels.org**
- **Install chargers to all your hotel sites**
- **Advertise your hotel on the EVHotel app or blog sites introducing your new charger**